Assembly Diagram FFOB-568

Electraplan
An Enterprise of the NIEDAX Group of Companies

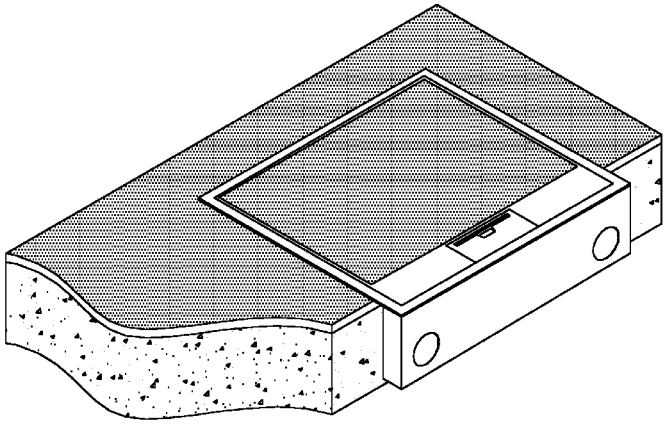

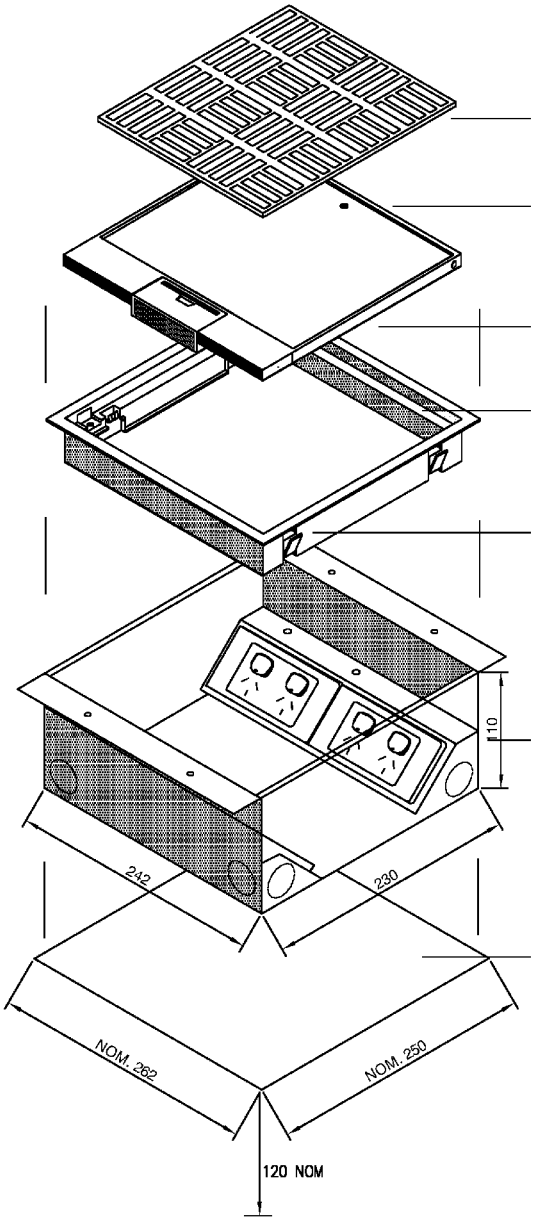

Features:

Optional lid infill with slip resistant tread

Moulded Polyamide lid with steel insert plate (8mm carpet rebate).

Cable flap with dust guards and recessed handle

Moulded frame assembly with 10mm carpet protective side edges.
Frame size (242 x 242mm) .

Fixing clamps securing lid / frame to box body

Steel box body
(242 x 230 x 110mm deep)
8 No. 25mm Dia. conduit knockouts
Box body can be cast directly into concrete or a preformed recess.

Recess Size: **Nom. 262 x 250 x 120mm deep**